Revision Paper 2 Year 9

Formulae: Higher Tier

You must not write on this formulae page.
Anything you write on this formulae page will gain NO credit.

Volume of prism = area of cross section × length

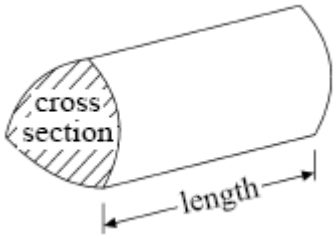

Volume of sphere $\frac{4}{3}\pi r^3$
Surface area of sphere = $4\pi r^2$

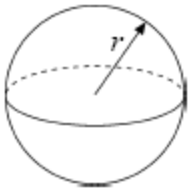

Volume of cone $\frac{1}{3}\pi r^2 h$
Curved surface area of cone = $\pi r l$

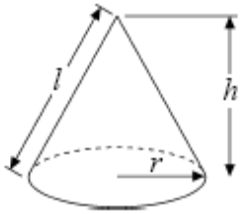

In any triangle ABC

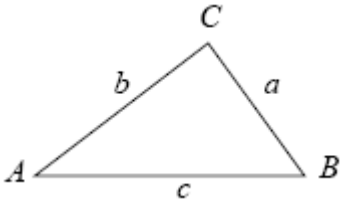

The Quadratic Equation
The solutions of $ax2 + bx + c = 0$
where $a \neq 0$, are given by

$$x = \frac{-b \pm \sqrt{(b^2 - 4ac)}}{2a}$$

Sine Rule $\frac{a}{\sin A} = \frac{b}{\sin B} = \frac{c}{\sin C}$

Cosine Rule $a^2 = b^2 + c^2 - 2bc \cos A$

Area of triangle = $\frac{1}{2} ab \sin C$

Answer ALL questions.
Write your answers in the spaces provided.
You must write down all stages in your working.

1. Here are some patterns made from sticks.

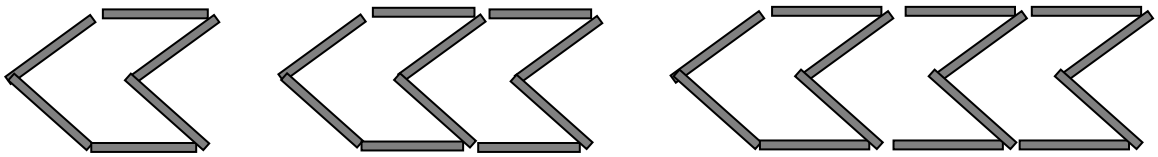

Pattern number 1 Pattern number 2 Pattern number 3

(a) Complete the table

Pattern number	**Number of sticks**
1	6
2	10
3	14
4	
5	
↓	↓
10	

(3)

(b) Explain if a complete pattern can be made from 99 sticks.

.....

.....

(2)

(c) Write down an expression, in terms of *n*, for the number of sticks in Pattern number *n*.

.....

(2)

(**Total for Question number 10 is 7 marks)**

2. (a) Work out 4.5^2

……..
(2)

(b) Write as a power of 4

(i) $4^5 \times 4^7$

……
(1)

(ii) $(4^5)^3$

……
(1)

(c) $3^n = \frac{1}{9}$

Find the value of n.

n = ……..
(1)
(Total for Question 2 is 5 marks)

3.

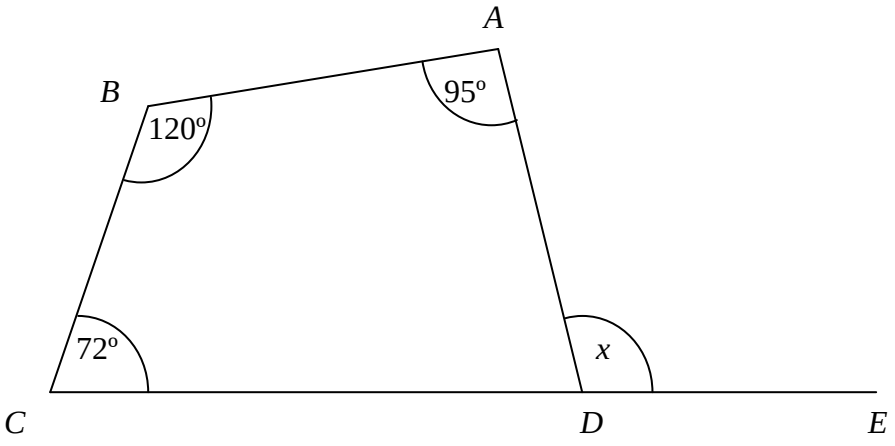

ABCD is a quadrilateral
CDE is a straight line.

Find the size of angle x.

(Total for Question 3 is 3 marks)

4. From his yacht Peter can see two lighthouses.

One of them flashes every 120 seconds.
The other flashes every 100 seconds.

At 4 p.m. both lighthouses flash at the same time.

At what time will both lighthouses next flash at the same time.

……..

(Total for Question 4 is 4 marks)

5. Simon spent $\frac{1}{3}$ of his pocket money on a computer game.

He spent $\frac{1}{4}$ of his pocket money on a ticket for a football match.

Work out the fraction of his pocket money that he had left.

……..

(Total for Question 5 is 3 marks)

***6.** Kevin wants to tile two walls in his bathroom.

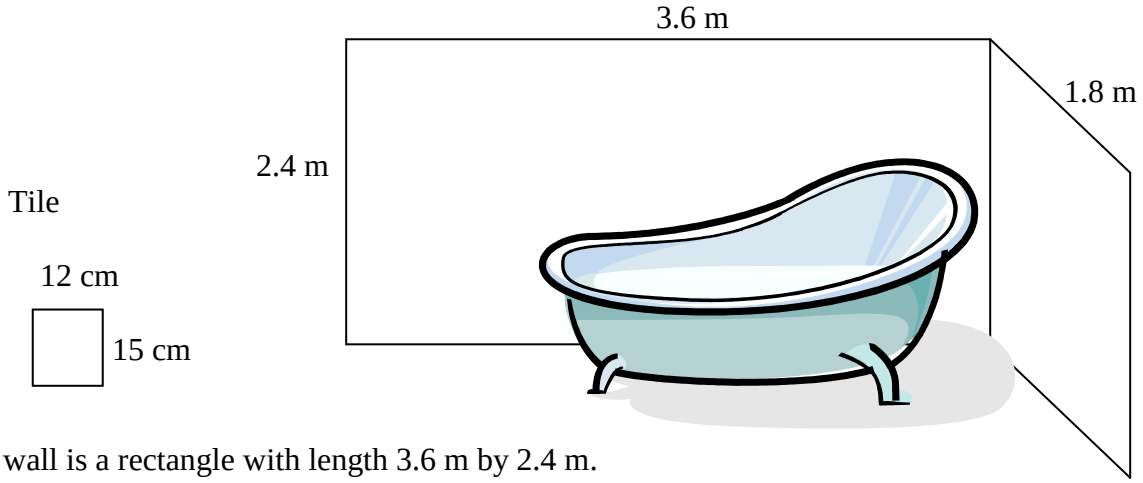

One wall is a rectangle with length 3.6 m by 2.4 m.
The other wall is a rectangle with length 2.1 m by 2.4 m.

The tiles that Kevin wants to use are 12 cm wide and 15 cm high.
There are 40 tiles in each box.

How many boxes of tiles does Kevin need to buy?

…… boxes

(Total for Question 6 is 6 marks)

7. (a) Simplify $x^5 \times x^6$

……
(1)

(b) Simplify $y^{12} \div y^4$

……
(1)

(c) Simplify $(p^4)^5$

……..
(1)

(Total for Question 7 is 3 marks)

---

8. (a) Write 0.00534 in standard form.

……
(1)

(b) Write as an ordinary number 4.5×10^5

……..
(1)

(Total for Question 8 is 2 marks)

---

9. (a) Expand and simplify $(x + 7)(x - 5)$

……..
(2)

(b) Factorise $x^2 - 5x + 6$

……..
(2)

(Total for Question 9 is 4 marks)

***10.** Rodney bought some old railway track at an auction.

Each piece of track was 20 metres long.
Each piece of track weighed 40 kg per metre length.

Rodney has a lorry that can carry a maximum of 45 tonnes.

What is the maximum number of railway tracks that Rodney can fit onto the lorry?

.....

(Total for Question 10 is 6 marks)

11. Factorise completely $8x^2 - 4xy + 2x - y$

.....

(Total for Question 11 is 3 marks)

12 Write the recurring decimal $0.0\dot{2}\dot{5}$ as a fraction.

……..

(Total for Question 13 is 3 marks)

13. (a) Simplify x^0

……

(1)

(b) Simplify $\left(y^{-\frac{3}{2}}\right)^4$

……..

(2)

(Total for Question 14 is 3 marks)

……

(Total for Question 15 is 3 marks)

TOTAL FOR PAPER is 60 MARKS